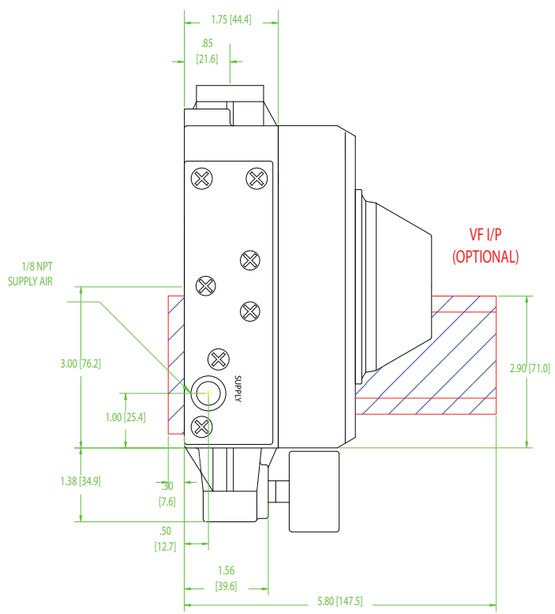
1.75 [44.4]
.85
[21.6]
VF I/P
(OPTIONAL)
1/8 NPT
SUPPLY AIR
3.00 [76.2]
SUPPLY
1.00 [25.4]
2.90 [71.0]
1.38 [34.9]
.30
[7.6]
.50
[12.7]
1.56
[39.6]
5.80 [147.5]

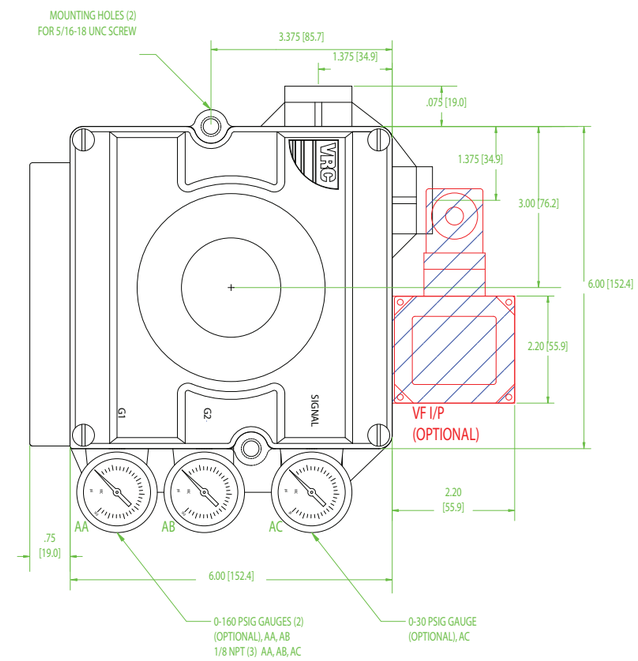
MOUNTING HOLES (2)
FOR 5/16-18 UNC SCREW
3.375 [85.7]
1.375 [34.9]
.075 [19.0]
1.375 [34.9]
3.00 [76.2]
6.00 [152.4]
2.20 [55.9]
VF I/P
(OPTIONAL)
G1
G2
SIGNAL
AA
AB
AC
2.20
[55.9]
.75
[19.0]
6.00 [152.4]
0-160 PSIG GAUGES (2)
(OPTIONAL), AA, AB
1/8 NPT (3) AA, AB, AC
0-30 PSIG GAUGE
(OPTIONAL), AC

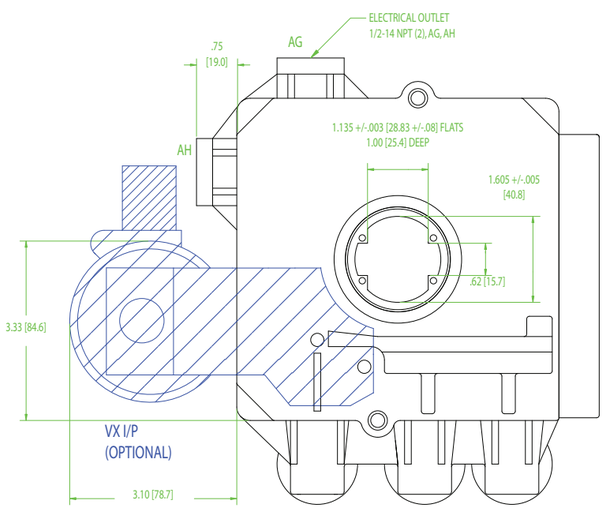
ELECTRICAL OUTLET
1/2-14 NPT (2), AG, AH
.75
[19.0]
AG
AH
1.135 +/-.003 [28.83 +/-.08] FLATS
1.00 [25.4] DEEP
1.605 +/-.005
[40.8]
.62 [15.7]
3.33 [84.6]
VX I/P
(OPTIONAL)
3.10 [78.7]

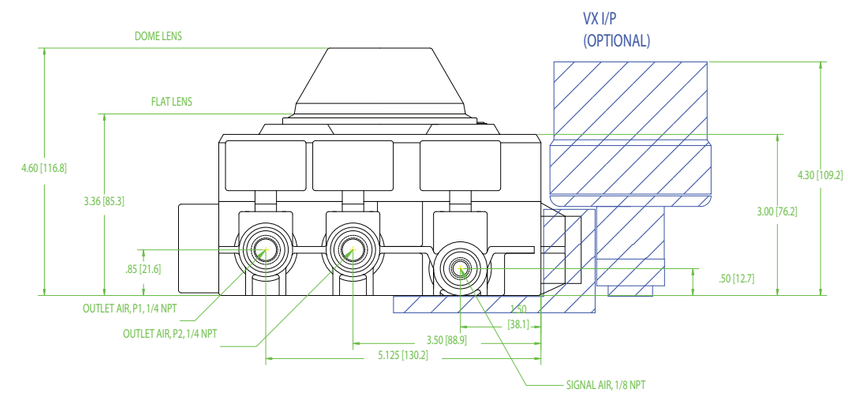
VX I/P
(OPTIONAL)
DOME LENS
FLAT LENS
4.60 [116.8]
3.36 [85.3]
4.30 [109.2]
3.00 [76.2]
.85 [21.6]
.50 [12.7]
OUTLET AIR, P1, 1/4 NPT
OUTLET AIR, P2, 1/4 NPT
1.50
[38.1]
3.50 [88.9]
5.125 [130.2]
SIGNAL AIR, 1/8 NPT